eSCOPE®
Electronic Lab Scope
Training

Direct Injection BMW Low Power

Motor Article Sept. 2012

By Bernie Thompson

At any given second somewhere on earth the sun is rising, and at any given second somewhere on earth the sun is setting. The only thing that changes which one of these events you will observe is where you are standing. This is similar to a Merry Go Round ride. If one is on the ride while it is running, then the world will be spinning past and the ride will be at rest. However if the ride is running and one is not on the ride but standing next to it, then the ride will be spinning past and the world will be at rest. This is referred to as perception and it clearly changes what one sees depending on where one is. Perception is not only a physical place that one looks from but it is also a mental or thinking place one looks from. Perception clearly affects each and every one of us in life but those of us who diagnoses vehicles deal with the effects of perception on a grand scale. For the place that you look at the problem from is what you will see!

I am a mobile technician that is called in to diagnose vehicles when the automotive repair shop or dealership has come to the end of their time, money, ability, and the number of parts that they are willing to guess at. I was recently called to diagnose one such vehicle. This vehicle had been to the dealership several times and now was at an automotive repair shop that specializes in German automobiles. The vehicle was born in Germany at the BMW factory in 2003. It was designed to be fast with its 12 cylinder Direct Injection 6.0 Liter engine. This vehicle was designed of racing DNA on the cutting edge of technology, but now the V12 beast had little of what it had started life with. The 12 cylinder engine coughed, misfires, and was lacking power.

I am not a BMW master technician; in fact I am not a master technician on any line of vehicle. No, I just like many of you, work on many lines of vehicles. So why am I called to diagnose this vehicle when the BMW experts have failed? Repairing and diagnosing vehicle problems is not about being a master of a vehicle line, it is about perception and where one looks at a problem from. Each and every one of you can become a master of diagnosing vehicles from any manufacturer. It is merely about moving the point of where you are looking at the problem from. The BMW engine ran poorly and the check engine lamp was on so I connected a scan tool to retrieve the Diagnostic Trouble Codes from the Engine Control Unit. BMW uses 2 engine control units one for bank 1 and one for bank 2. The DTC's from the bank one ECU are; output stage HPFI 2, output stage HPFI 1, output stage HPFI 3, misfire detection sum check error bank 1, misfire detection cylinder 2. The DTC's from the bank two ECM are; high pressure sensor test (signal, rail pressure sensor) bank 2, output stage HPFI 9, output stage HPFI 11, output stage HPFI 8, misfire detection sum check error bank 2, misfire detection cylinder 9. Many of the engine codes that have set have a designation of HPFI which stands for High Pressure Fuel Injector. Both bank 1 and bank 2 ECM,s are coding the high pressure fuel injector circuits. These high pressure fuel injectors are not directly controlled by the engine control modules but are controlled by two separate control modules that are dedicated to control the high pressure fuel injectors, one for each bank figure 1.

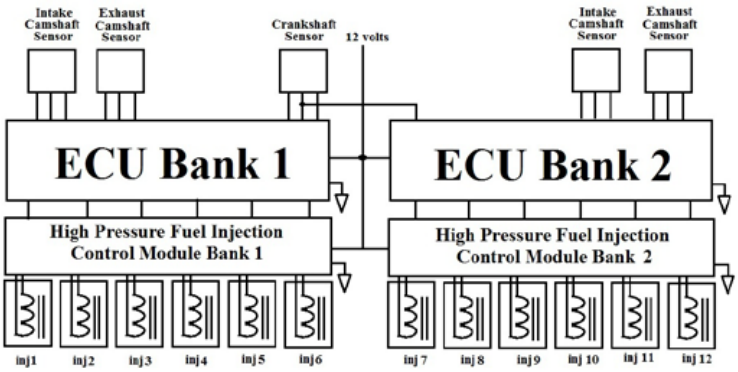

Fig. 1

These high pressure fuel injector control modules are isolated from the ECU due to the high voltage that is needed in order to turn on the Direct Injection fuel injectors.

Now that you have gathered some of the data, what do you do with the information? It will be important to look at the data that you have collected correctly. This is where I see many technicians make their mistake. Technicians believe that the codes that they get from a control unit are correct. This could not be further from the truth. In order for a control unit to set a code the data thresholds must be programmed into the control unit. The codes are only as good has the programmer and the programmers' vision of what might fail. No matter how good the programmer is there are always variables that cannot be accounted for in both the software and in the hardware. Thus take the codes from any control unit as the data that they represent; do not take these codes and assume that this is what is actually wrong with the system.

The BMW data represents 3 high pressure fuel injector circuits codes with an individual cylinder misfire on Bank 1 and Bank 2. Now each bank has its own ECM and its own Fuel Injector Control Module. It could be possible that 6 fuel injector circuits that are controlled by four different control modules all have problems, although it would not be very probable. So let us first deal with the probable. When dealing with the probable the scan tool data is a very small piece of the puzzle, a much larger piece of the puzzle are the symptoms. These symptoms on the BMW are the engine does in fact have misfires, and lacks power. Now combine the data that you have collected so far, the engine is misfiring and the DTC's are concerned with the high pressure fuel injector circuits.

The next step is to check a wiring diagram to see how all the circuits interact with each other. In order to check the high pressure fuel injector circuits an oscilloscope will be needed. It is very important to take extreme care when checking high voltage injector circuits. (Read and understand the manufacturer's warning for testing any high voltage circuit before you connect any test instrument to the circuit.) Gasoline direct injection uses 50-90 volts and has a current draw of 12 to 18 amps. This allows the fuel injector to open very rapidly allowing opening times of 1 µs to 1.5 µs. Most technicians have tested the saturation port style fuel injectors on engines. These injectors work on 12-15 volts and have a current draw of .8 to 1.3 amp draw, this allows opening times of .8 ms to 1.3 ms. When injecting the gasoline into the intake port the time needed is much longer than when injecting gasoline directly into the cylinder. For intake port injection the duration can last for almost four complete stokes. So at 6000 RPM the injection time would be less than 20 ms. For direct injection in homogeneous operation the duration is one stoke. So at 6000 RPM the injection time would be less than 5 ms. With this operational requirement for the direct fuel injector the voltage sent to the injector will need to be increased to speed up the injector needle opening time. The fuel pressure will also be increased by a considerable sum in order to deliver the fuel required to correctly run the engine. In figure 2 the BMW direct fuel injector waveform is shown. The yellow trace is the power, the red trace is ground, and the green trace is amperage.

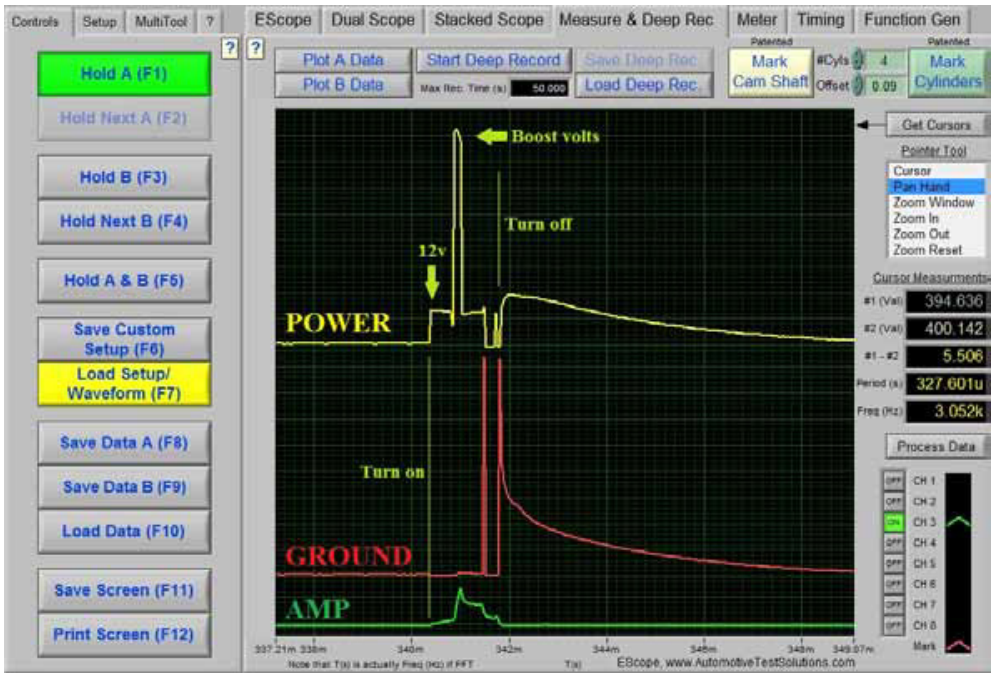

Fig. 2

These injectors are two wire type fuel injectors. The fuel control module receives a command signal from the ECU. The fuel control module then sends power down one of the two wires and grounds the other wire thus completing the circuit. The fuel control module first sends battery voltage down the power wire allowing a magnetic field build up within the injector winding, this current build up can be seen in the amperage waveform as a slight rise. The fuel control module then sends a boost voltage of 83 volts into the injector. This increases the current flow to 14 amps, thus strengthening the pre-magnetic field made from the battery voltage. This stronger magnetic field now lifts the injector needle off of its seat and accelerates its movement to full open. The 83 volt boost is made inside the fuel control module from battery voltage by the use of a DC/DC converter. The fuel control module only holds the boost voltage high for a short duration. The boost voltage is used to open the injector very rapidly; once the injector needle valve is open the vehicle battery voltage is enough to hold it off its seat. The fuel control module then shuts the power on and off very rapidly to limit the current within the injector winding, this limited current keeps the injector open. The fuel control module then shuts the power off at the end of the command signal sent from the ECU. The injector needle valve then closes shutting off the fuel flow into the cylinder.

Figure 3 shows the oscilloscope connections made at the BMW's ECU and fuel control module.

Fig. 3

The power circuits for injector's 1-6 bank 1, and the bank 1 camshaft sensors are connected to the oscilloscope. In figure 4 the injector circuits and camshaft sensors can be viewed on the oscilloscope screen.

Fig. 4

Injector 3 and injector 4 are missing a pulse from the fuel injector control module. There are several questions that will need to be addressed; the first is why two power circuits are activated at the same time, and the second is what would cause the injectors power pulses to be missing. Let's start with why there are two power pulses at the same

In figure 5 a wiring diagram is shown that explains the dual power pulse shown on the oscilloscope screen. Manufacturers are greatly concerned with the cost to build each vehicle. Every bit of cost savings is very important in the overall cost reduction of the vehicle.

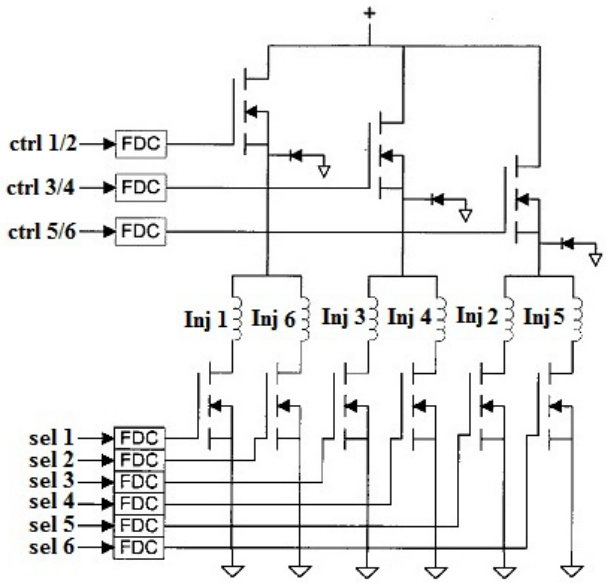

Fig. 5

This is why the power drivers are shared by two fuel injectors. This saves in the cost to build the circuit. Instead of having 6 drivers that take up more circuit board space, only 3 power side drivers are used. When testing these circuits this will be something that you will need to know. Since 2 injectors are connected to the same power driver, when the power driver is turned on the voltage is present at both injector circuits as seen in Figure 6.

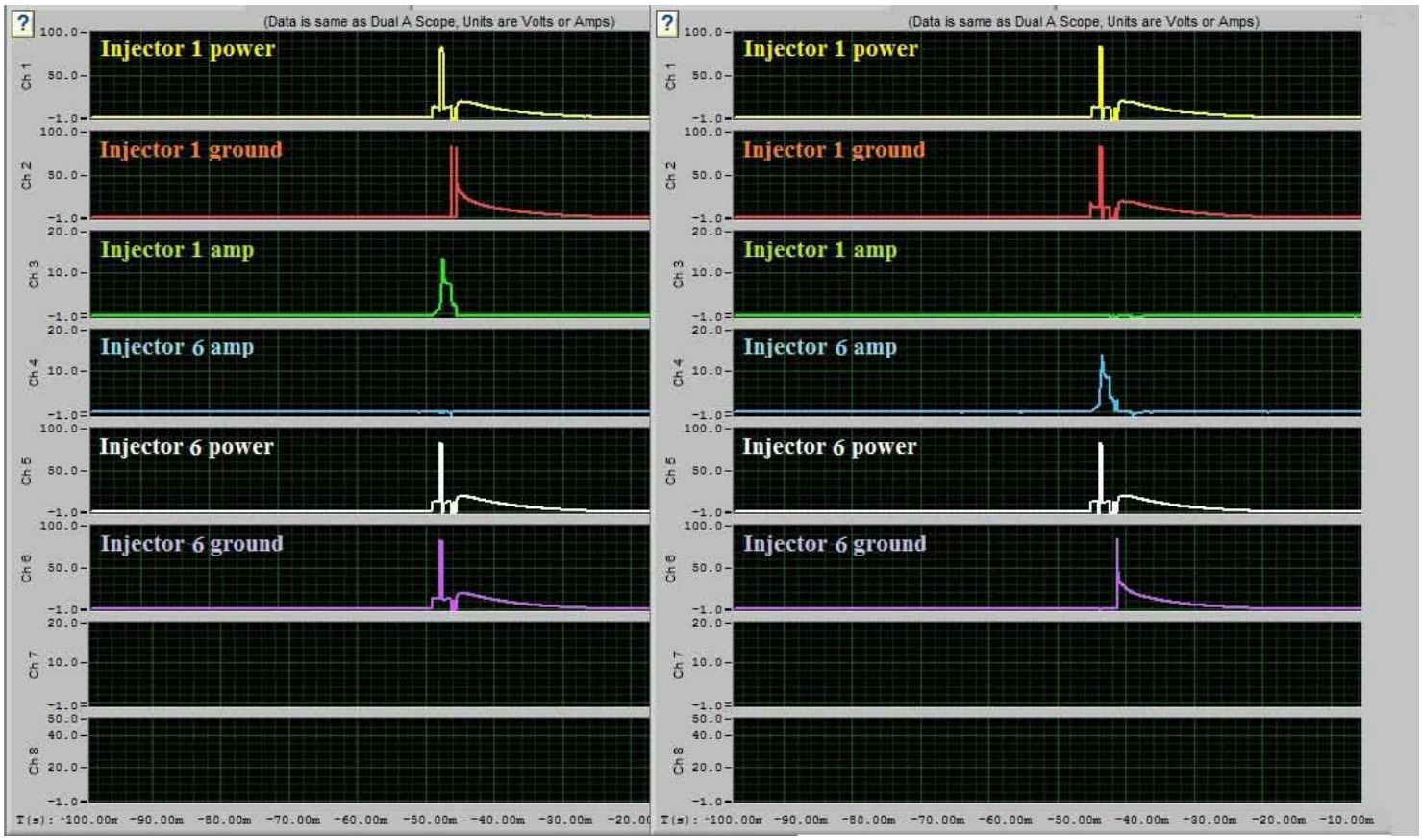

The ground drivers are separated and are only turned on for the injector that is to be activated. The ground side of the injector that is not activated will remain open and will show the power side voltage. Remember that an open circuit always has source voltage to the point that the circuit is open.

Now the second question, why are the power signals missing? When you look closely the power signals are totally missing; this means that the driver was not activated. If the power driver was activated the vehicle battery voltage would be present even if the high voltage boost circuit had a problem. It would also be possible that the circuit was grounded. If a circuit becomes directly grounded there will not be voltage present on the circuit. However this is possible but it is not very probable. This is due in part to the fact that the very next power signal to activate the injector is present. It will always be necessary to look through a large amount of the data on the oscilloscope.

On this BMW as the data is analyzed there are more problems than just the power signals missing. In figure 7 the 3-4 injectors power signals double actuate and are breaking down.

Fig. 7

Now the question becomes what would cause the injectors control power to be missing and to double fire? Problems such as the module power feeds or grounds could play a factor. But first the commands from the ECU to the Fuel Injector Control Module must be verified.
In figure 8 the commands from the ECU to the Fuel Injector Control Module and the crankshaft position sensor are displayed on the oscilloscope screen.

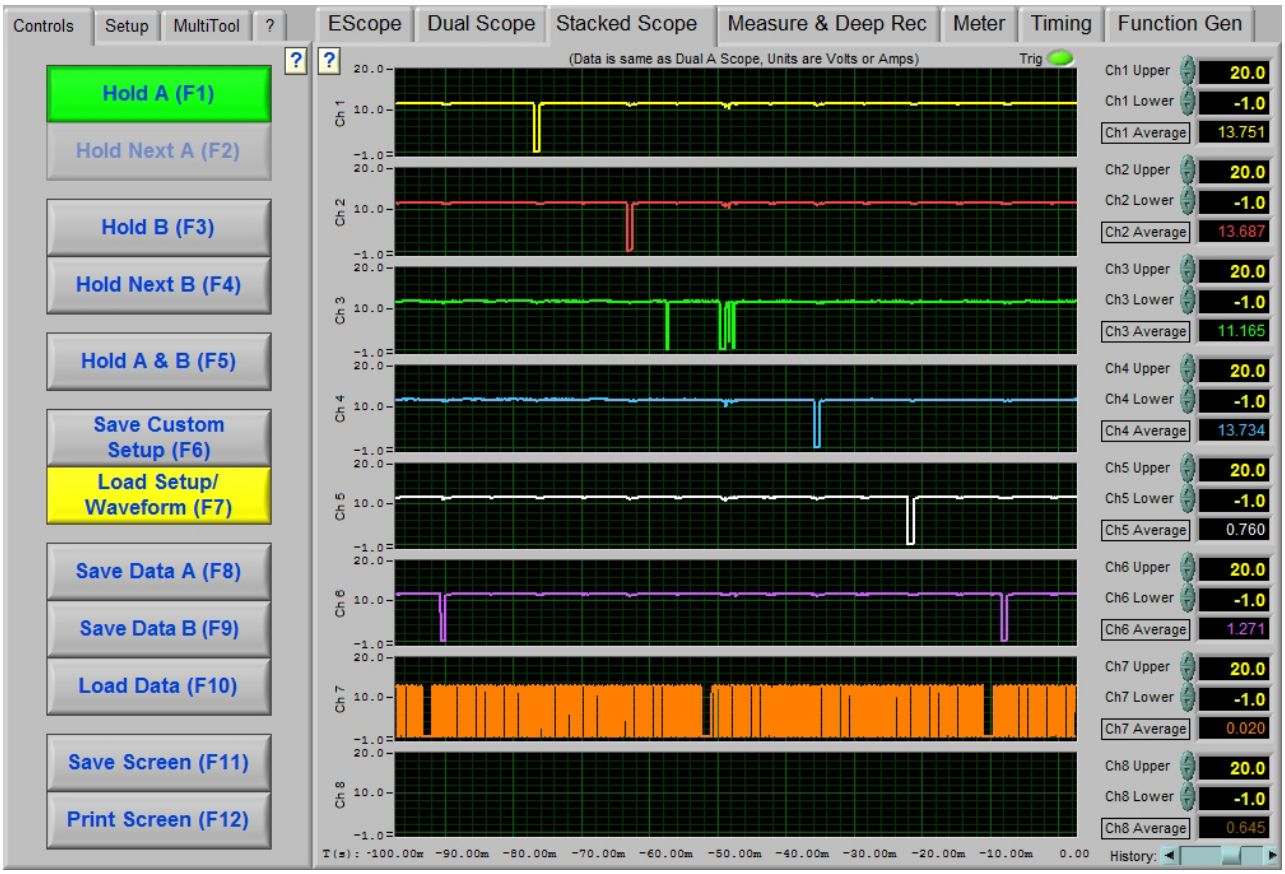

Fig. 8

The command from the ECU to activate the #3 injector is breaking down. This injector command signal is created by the voltage on the command circuit to be pulled down by the ECU. This in turn activates the Fuel Injector Control Module injector circuit and turns the injector on and off. This #3 injector break down again could be caused by the control wire being externally grounded or the circuit grounding could be caused by either module. However this possibility can be eliminated by the fact that the command signal does not pull to ground at all and is totally missing as seen in Figure 9.

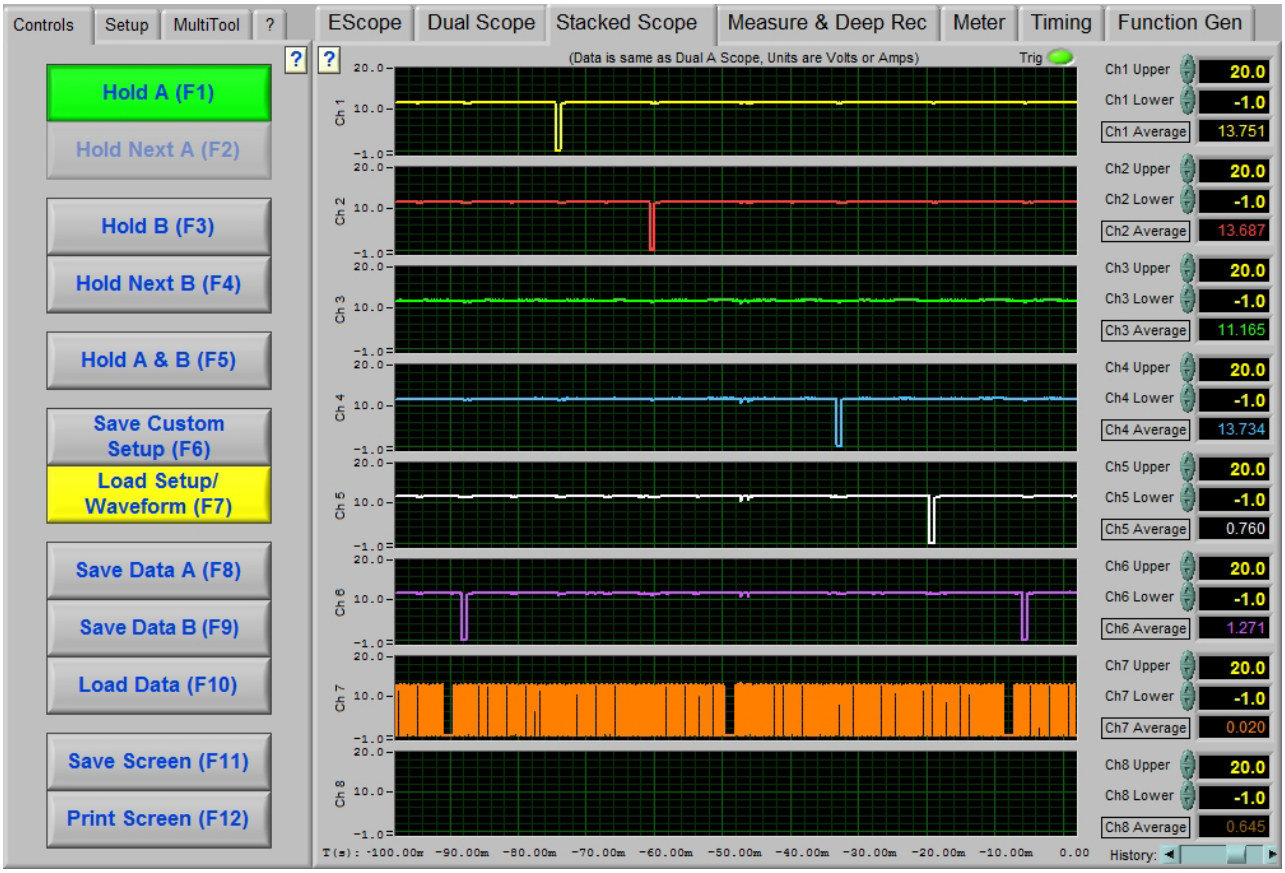

Fig. 9

This indicates that the problem is the ECU activation command. In order for any engine control unit to time the actuation of injectors or ignition coils, the crank angle space must be known. This is accomplished with input signals from the crankshaft position sensor and the camshaft position sensors working in conjunction with the microprocessors hardware clock. It will be imperative to check these input signals very carefully with the oscilloscope. If there are any missing signals, additional signals, noise on the signals or the camshaft to crankshaft signals are out of sync the ECU cannot properly calculate the crank angle space. This means that the control of these actuators cannot be correctly commanded.

On the BMW the crankshaft sensor and camshaft sensors were checked and are correct in all ways. So where does this leave us with are diagnoses. The powers and ground that supply the ECU can cause problems and must be tested with the engine running. To have a voltage drop present the circuit must have current flowing through it, the higher the current the more voltage drop will be present. The ECU could have an internal failure and need to be replaced, but first let's take a closer look at one of the fuel injector control commands during the breakdown of the signal as seen in figure 10.

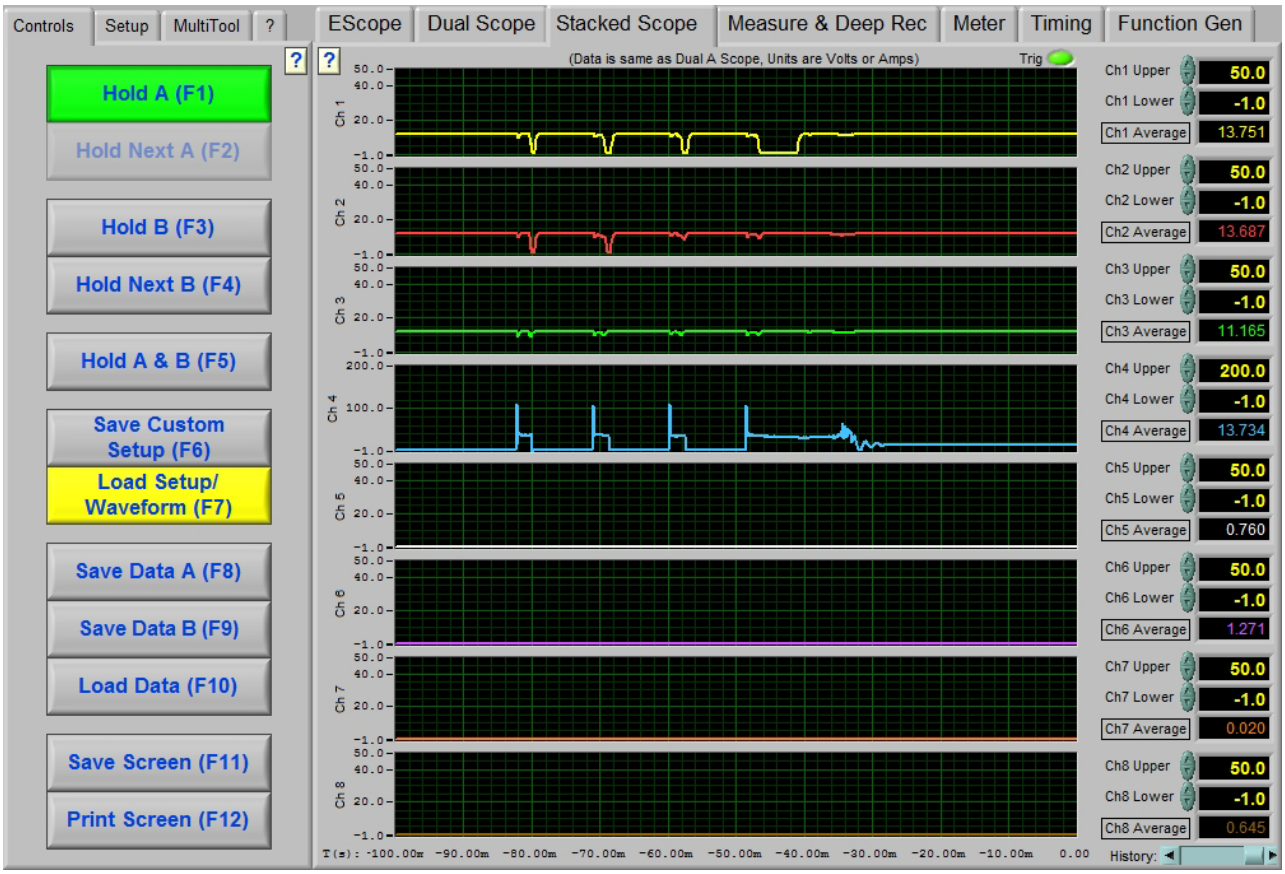

Fig. 10

The fuel injector command for injector #3 is the yellow trace on top. There should only be one pull down signal commanded to turn the fuel injector on and off, not four. It can be seen that the breakdown signal looks a lot like the ignition coil command on an engine with a multi discharge ignition system. Since the waveform looks so similar to the ignition coil command, it will be necessary to test the injector command waveform against the ignition coil command. Now take another trace from the oscilloscope and connect it to each coil command at the ECU, for this BMW controls the ignition coil commands with the ECU bank 1 and ECU bank 2 modules. The blue trace in figure 10 is the ignition coil control for #10 cylinder. Note that the two signals directly align with one another. Also beware that the #10 cylinder ignition coil is not connected to the bank 1 ECU, but is connected to the Bank 2 ECU. It is important to understand that when an ignition coil fails it can affect any part of the control system. The #10 ignition coil was replaced bringing this 12 cylinder beast back to life. What is important is to change the angle of where you are diagnosing the vehicle from. This allows the perception of the problem to change, making the impossible diagnosis into the routine diagnosis!